Beyond von Neumann

Mapping streaming applications to many core architectures

Per Andersson, Computer Science

Per.Andersson@cs.lth.se

Chenxin Zhang, Electrical and Information Technology

Chenxin.Zhang@eit.lth.se

Lund University

Introduction

Embedded Systems

today: 3G, 10 Gops

tomorrow:

- 4G, 1000 Gops
- phased array antennas car radar systems, 10 Tops

more computational power

same energy budget

Silicon Technology

- Moore's law
- no increase in frequency
- parallelism

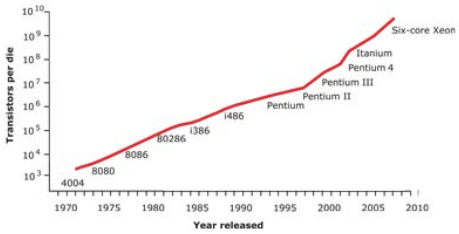

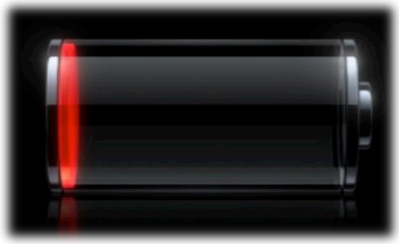

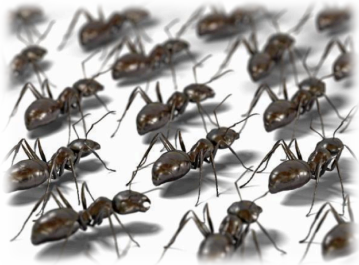

Accelerators

to many standards and variants

Processors

- instruction level
- thread level
- limited by: # independent instructions
- memory bus bandwidth
- thread synchronization
- cache synchronization
- energy hungry

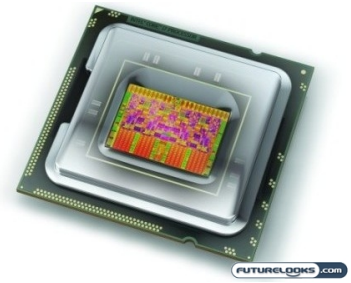

Weakly Programmable Processor Arrays

- local state
- local communication
- costly global communication

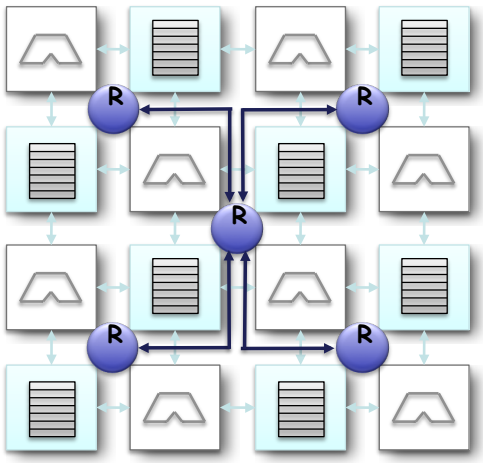

Lund Processing Cell

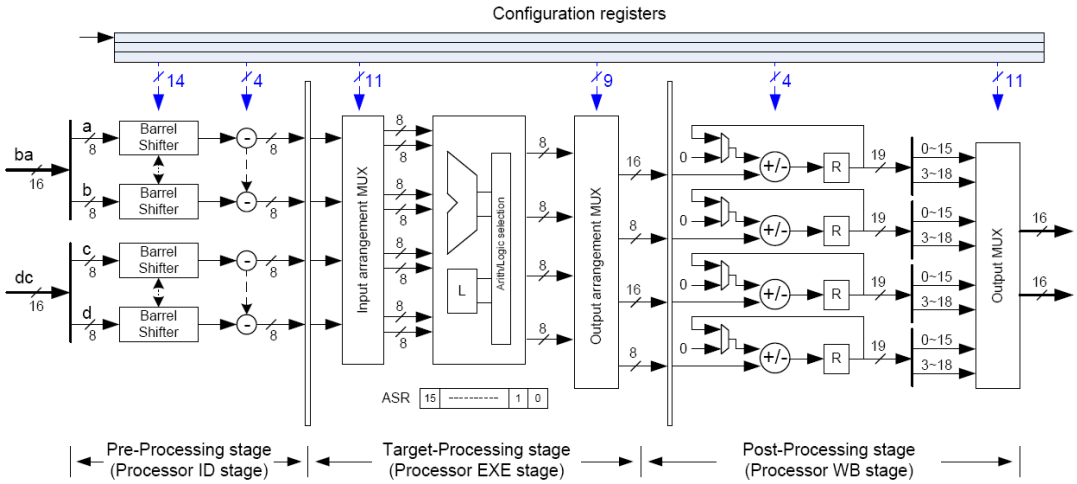

Lund Memory Cell

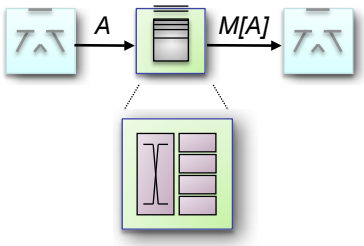

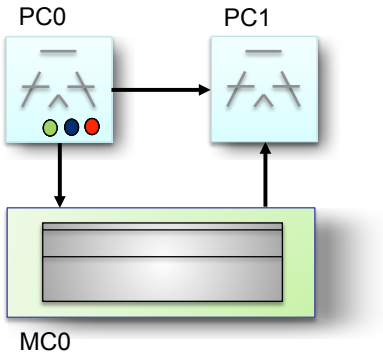

OFDM time synchronization

- standards:
  - IEEE 802.11n
  - 3GPP LTE
  - DVB
- 2 concurrent streams
- adapts QoS

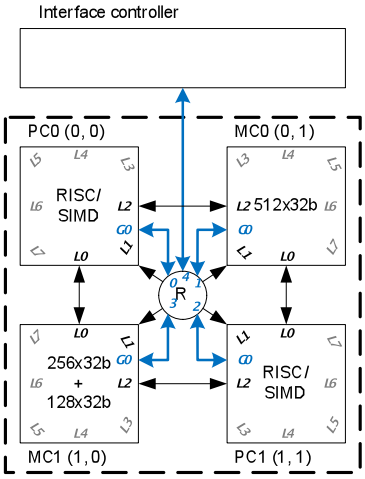

Software

Its success is based on reuse:

- component based
- object oriented

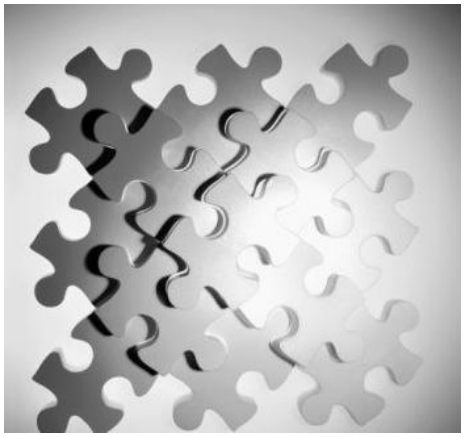

Von Neumann

- a common model
- simple to understand
- enables high reuse of software
- liberates software from target hardware

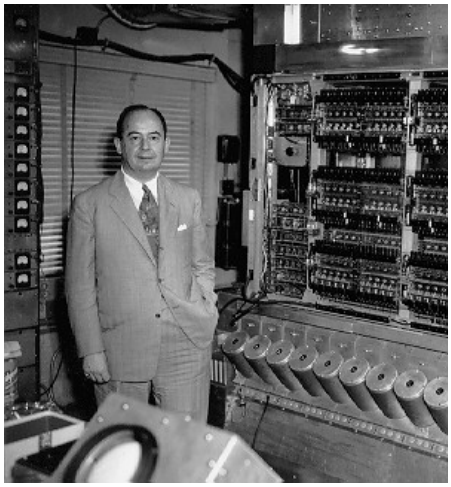

Extending for Parallelism

- threads
- locks and synchronization
- at least 2x development cost
- increase in # bugs

Target Specialized Implementations

for efficiency:

- vendor specific API/language
- each architecture require its own implementation

NO REUSE

Data Flow Model

- natural match for signal processing applications
- preserve the inherited parallelism
- matches WPPA hardware

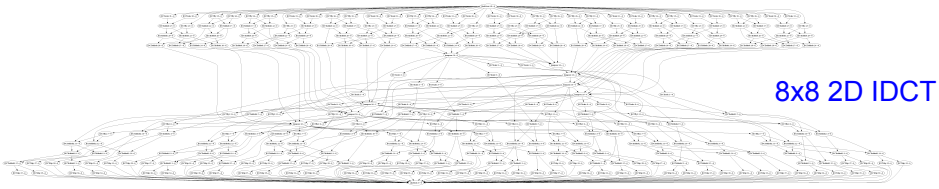

CAL

- opendf.org
- mpeg reference implementation

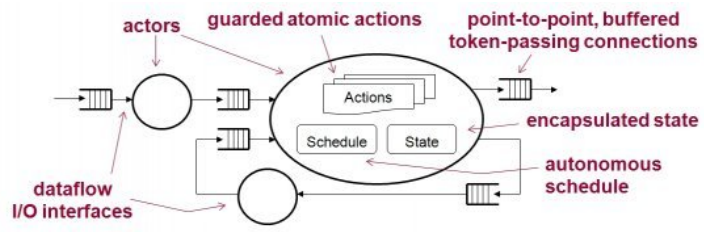

Tool Flow

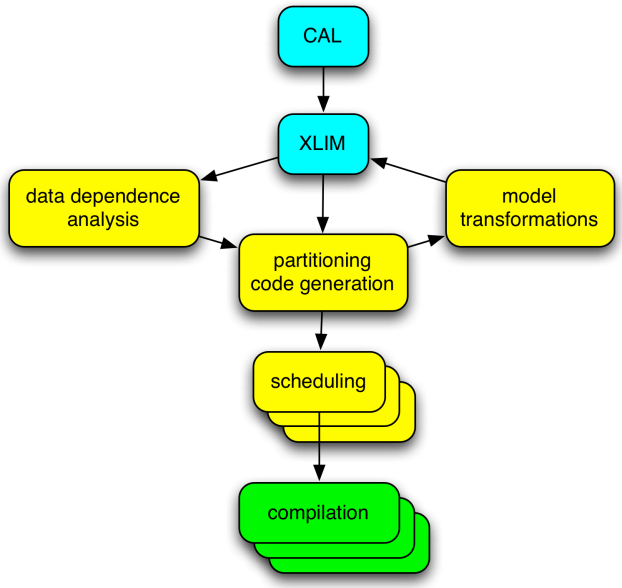

Partitioning

- data centric
  - limited memory size
  - local communication
- static sub-graphs
- constraint programming

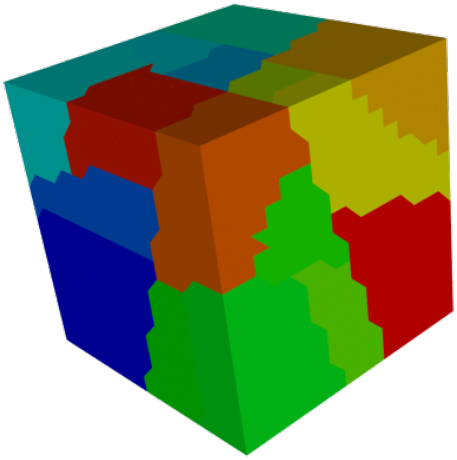

Liberate Software from Target

software
- abstract concepts

tools/run-time
- when
- where
- how

intermediate model
- operations
- storage
- synchronization

Summary

processing power will be provided

liberate software from target HW

- we need a new programming paradigm
- data flow

LUND UNIVERSITY